LTR	DESCRIPTION	DATE	APPROVEI

NOTES: UNLESS OTHERWISE SPECIFIED

1. CONSTRUCTION:
   HOUSING & PLUNGER: MOLDED NYLON TYPE 6,6. AVAILABLE IN RED & YEL.
   CONTACT BLADE: BERYLLIUM COPPER PER QQ-C-533. GOLD PLATER PER MIL-G-45204 TYPE 1, 0.00001 [0.000254] THICK MINIMUM.
   SPRING: STAINLESS STEEL TYPE 302.

2. PERFORMANCE:
   MAXIMUM CURRENT: 4.4 AMPS WITH 76° TEMPERATURE RISE.
   MAXIMUM VOLTAGE: 2.4 KV
   MAXIMUM TEMPERATURE: 200°F (93°C)

3. FEATURES:
   HOOK FITS COMPONENTS UP TO ø0.040 [ø1.01].
   FIELD SERVICEABLE.

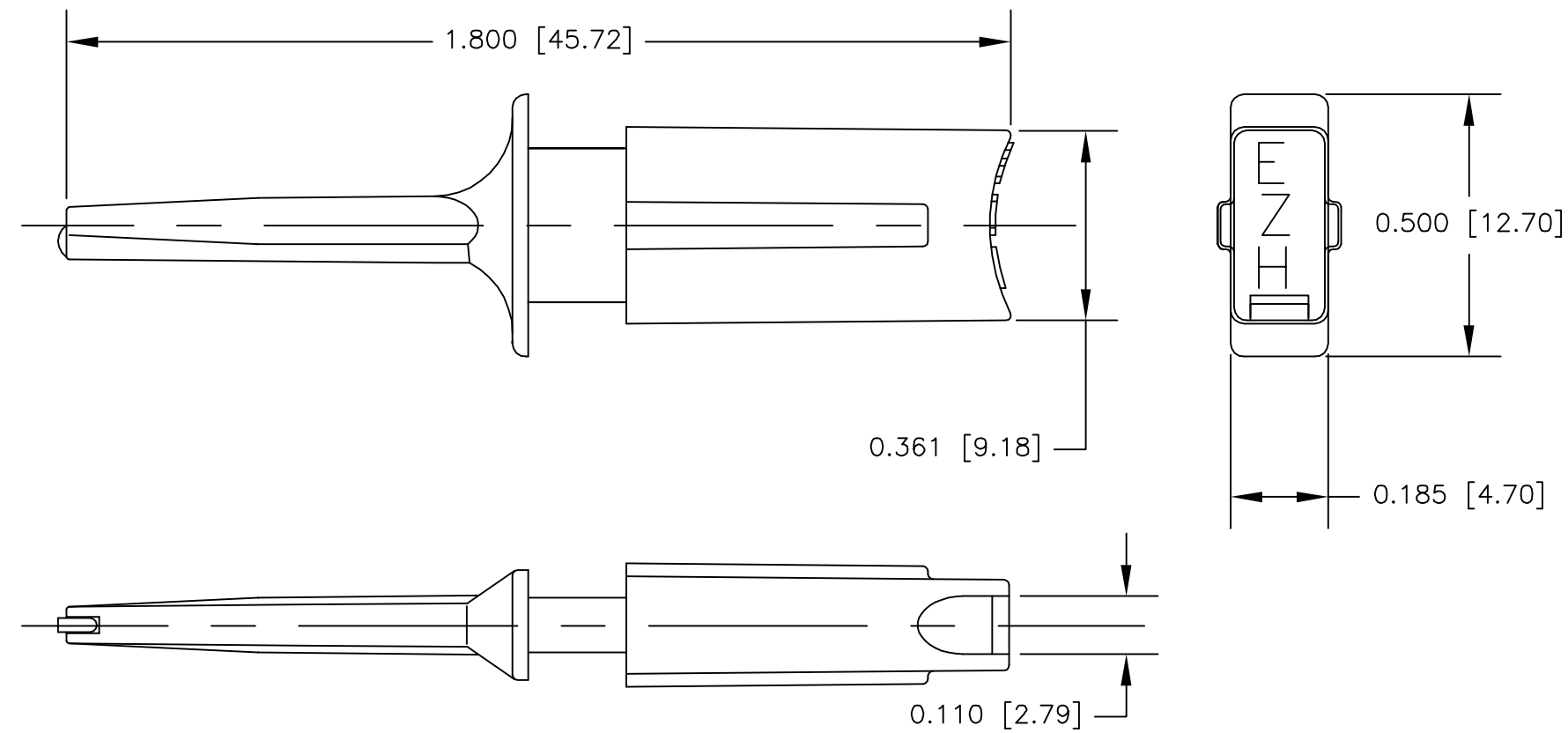

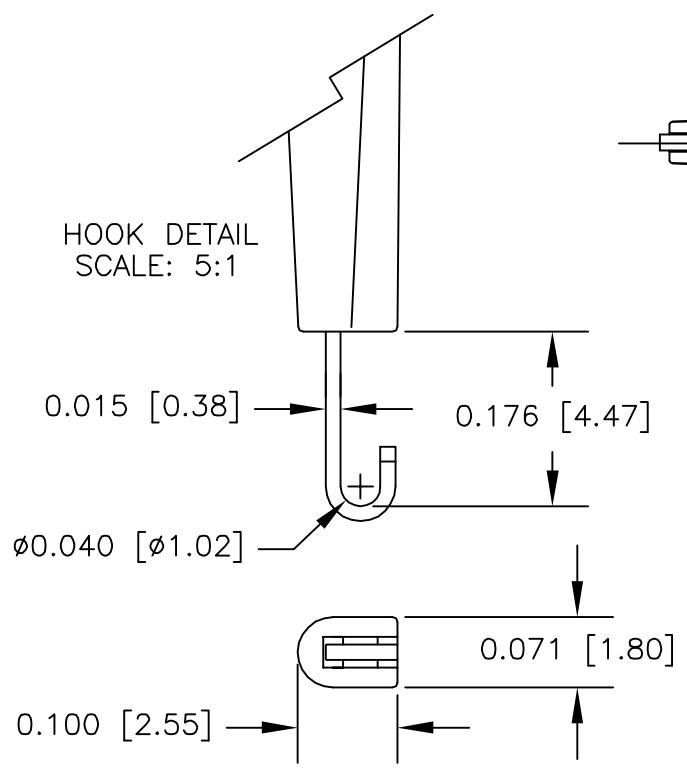

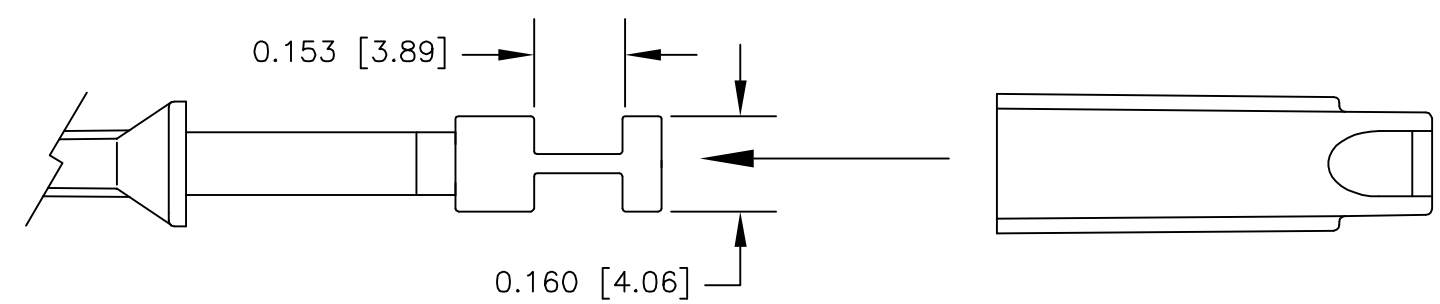

WIRE ATTACHMENT

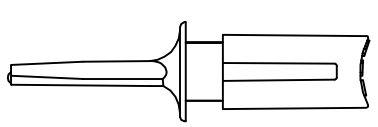

ACTUAL SIZE

		UNLESS OTHERWISE SPECIFIED DIMENSIONS ARE IN INCHES TOLERANCES ARE: FRACTIONS ± DECIMALS .XX ± .XXX ± ANGLES ±	CONTRACT NO.	
			APPROVALS	DATE
			DRAWN R.L.	10/12
		MATERIAL SEE NOTE.	APPROVED BY	
		FINISH SEE NOTE.		
NEXT ASSY	USED ON			
APPLICATION		DO NOT SCALE DRAWING		

E-Z-HOOK DIVISION OF TEKTEST INC. ARCADIA, CA 91006 U.S.A.

DESCRIPTION
E-Z-MICRO HOOK TEST CONNECTOR

SIZE	CODE IDENT NO.	DRAWING NO.	REV
B	08505	XMR	

SCALE 3:1 SHEET 1 OF 1

THE INFORMATION CONTAINED IN THIS DOCUMENT IS PROPRIETARY TO E-Z-HOOK. THE INFORMATION IS NOT TO BE REPRODUCED WITHOUT PRIOR WRITTEN PERMISSION OF E-Z-HOOK, DIV. OF TEKTEST INC.
MAXIMUM TESTED RATINGS IN A HANDS-FREE CONTROLLED ENVIRONMENT. MAXIMUM RATINGS ARE NOT TO BE USED CONCURRENTLY.